Combustion Research Facility News

Volume 21, No. 5 September/October 1999 Sandia National Laboratories

Long-Term Testing of Steelmaking Sensor Completed

We have recently completed a five-year project developing a laser-based sensor for real-time control of basic oxygen steelmaking. The work has relied heavily on Sandia's expertise in optical diagnostics for high-temperature, particle-laden environments, and is an excellent fit with the needs of North American steelmakers for improved methods to monitor and control process operations.

Sarah Allendorf, David Ottesen, Peter Ludowise, Alan Salmi, James Ross, and Don Hardesty are collaborating with Michel Bonin, Alan Alsing, and Soren Jensen (Insitec, Inc.), Tim Miller, Dan Goldstein, and Alok Sharan (Bethlehem Steel) and Gary Hubbard (Hubbard Associates) under a program jointly funded by DOE's Office of Industrial Technologies, Industries of the Future Program and a consortium of steel companies under the American Iron and Steel Institute.

Mid-infrared absorption and emission measurements were made of the exhaust gases emanating from a basic oxygen furnace (BOF). The BOF process is the principal industrial steelmaking process in the US, and is currently controlled by a static materials and energy-balance model, whose efficiency and accuracy are limited by the lack of real-time monitoring.

A spectroscopic measurement of CO temperature in the exhaust of the 300-ton BOF at Bethlehem Steel's Sparrows Point Plant (Baltimore, MD) is shown in Figure 1. These real-time data, acquired using Sandia's high-resolution tunable diode laser (PDL) sensor, are statistically correlated with the final steel temperature. Future work combining this real-time output with simultaneous data streams from other Sandia sensors and a dynamic model incorporating plant processing data offers the possibility of a truly dynamic control system that could substantially improve the BOF process.

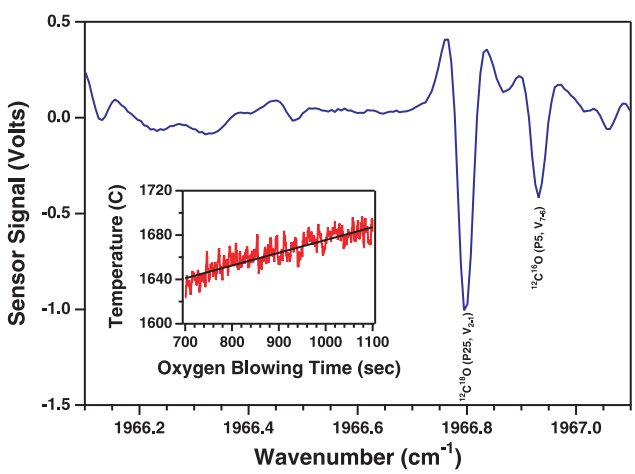

Figure 1. Second-harmonic (2f) laser absorption spectrum (blue curve) of BOF exhaust gas acquired during oxygen blowing. Real-time gas temperature is calculated from intensity ratio of the two assigned CO transitions (inset: calculated temperature – red curve; linear best fit – black line).

Several important spin-offs have resulted from our current work. Another laser-based sensor development in conjunction with Bob Kolarik and Penny Iwamasa of the Timken Company (using an electric arc furnace process) is being initiated. We will use line-of-sight absorption spectroscopy to optimize the efficiency of the electric furnace in real-time by controlling the post-combustion of CO to CO_2. An example of these effects in the BOF exhaust gas is shown in Figure 2.

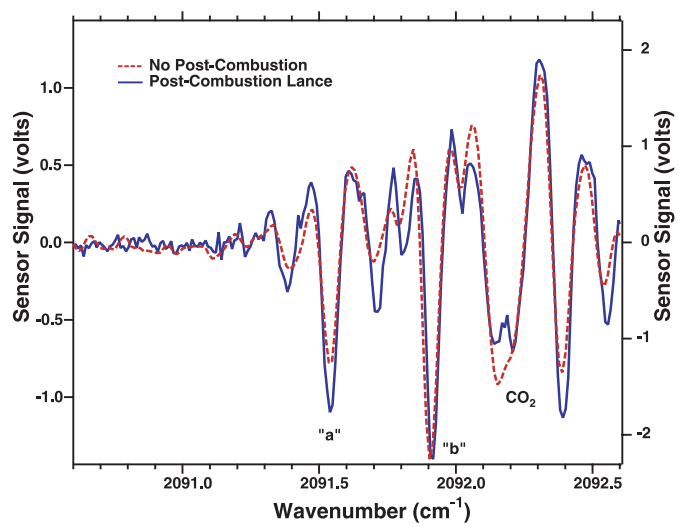

Figure 2. Comparison of 2f sensor signals during mid-blow for two heats: No post-combustion lance (dashed curve / left axis) and post-combustion lance (solid curve / right axis). Changes in CO line intensities (peak "a" relative to "b") and CO_2 transition at 2092.23 cm^{-1} result from post-combustion of furnace exhaust gas.

A second optical sensor system measuring infrared emission from a BOF exhaust gas stream at multiple wavelengths has also achieved an excellent correlation of the optical data with both the final steel carbon concentration and characteristic ejection of foaming slag and steel from the furnace. A project to optimize this sensor has been approved, and the sensor package may also be combined with our TDL-based system resulting in a multi-sensor dynamic predictive capability.

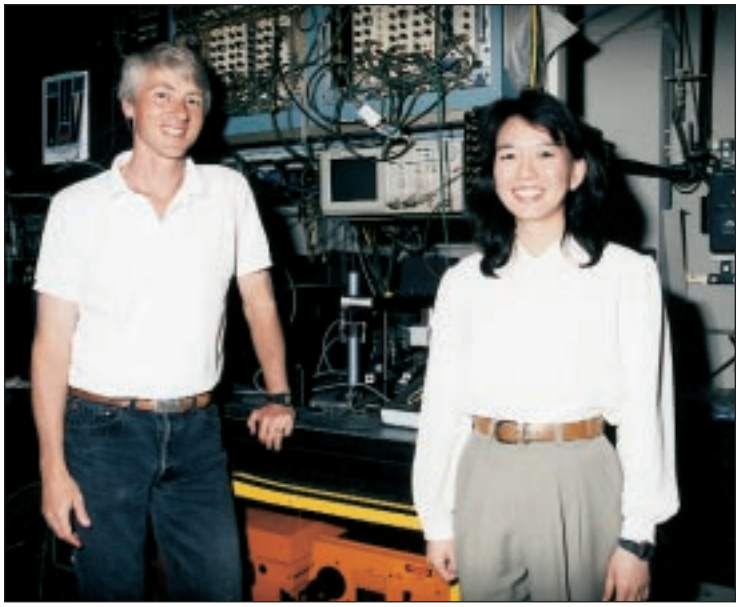

Ying-Ling Chen (right) has been a post-doctoral appointee working with Rob Barlow in the Turbulent Diffusion Flame laboratory. She is leaving the CRF this summer to join the faculty at the University of Tennessee Space Institute.

November CRF Phase II Event

Plans for the formal opening of the CRF Phase II are proceeding. The event will take place on November 18. Tours will be preceded by a half-day symposium on national research needs for the next decade. The symposium format will include a series of invited guests from industry, government and academia.

As further details become available, they can be found on the Sandia Web Page at http://www.ca.sandia.gov/crf.

Photographs of the 1999 summer visitors to the CRF can be found at www.ca.sandia.gov/crf/WhatsHot.html

Toby Hain (left) has completed his postdoctoral position with Andy McIlroy developing a new flame-sampling, molecular beam mass spectrometer for studying flame chemistry. Toby implemented a new single-photon, vuv photoionization, time-of-flight mass spectrometer for sensitive and selective detection of combustion intermediates. Toby is returning to his undergraduate alma mater, San Angelo State University in Texas, as an assistant professor of chemistry.

Bob Lucht (center) visited the CRF for several weeks this summer to investigate polarization spectroscopy using picosecond ultraviolet and nanosecond infrared laser pulses. Bob worked with CRF staff members Roger Farrow (right) and Andy McIlroy on the respective experiments. The photograph was taken in the Picosecond Diagnostics and Spectroscopy Laboratory.

The CRF News is published bimonthly by the Combustion Research Facility, Sandia National Laboratories, Livermore, California, 94551-0969.

Director: William J. McLean
Mail Stop 9054

Editor: April Cunningham
Email: acunni@sandia.gov

Advanced probe for fire diagnostics developed

Sandia is responsible for evaluating and guaranteeing the safety and reliability of nuclear weapons systems under normal and abnormal conditions, for example in a fire-accident scenario. In support of this program, Sandia has conducted a number of large-scale fire tests (e.g., that shown in Figure 1) at its burn site in Albuquerque, NM. The phenomenological understanding of these fires has been problematic due to the limited suite of diagnostics available that have been shown to survive and give useful information in this harsh environment. Furthermore, the lack of spatially and temporally resolved measurements has hindered the development of computational submodels for fire simulations.

Figure 1. Photograph of a 5-m diameter pool fire of JP-8 aviation fuel.

Chris Shaddix, Phil Santangelo, Sarah Allendorf, Dave Ottesen, Peter Ludowise, and Gary Hubbard (Hubbard Associates) are working with Lou Gritzo (Sandia/NM) to apply a new probe to measure transient, local concentrations of soot and major chemical species in large pool fires. This project, uses near-infrared tunable diode laser (TDL) absorption spectroscopy to perform these measurements by bringing the incident laser light into the fire and the transmitted light out via fiber optics placed within a water-cooled probe. Laboratory experimentation at the CRF over the past year has established the basis for the complicated optical and electronic system design of the TDL diagnostic system. (see Figure 2)

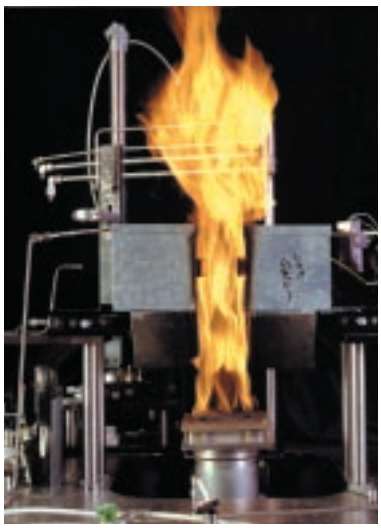

Figure 2. Tumble diode laser diagnostic implemented in a laboratory flame.

Advanced Sensor Technologies Applied to Glass Facility

Mark Allendorf and Anthony McDaniel, along with CRADA partner Libbey-Owens-Ford (LOF) , are investigating the application of advanced chemical sensors for on-line control of float-glass coating operations. The objective of this project, which is supported by the DOE Office of Industrial Technologies, Industries of the Future Glass Program, is to demonstrate the use of novel technologies for measuring the chemical content of gas-phase process streams. The glass industry aims to implement real-time monitoring and control methods to improve process efficiency and lower costs associated with depositing energy-efficient coatings on architectural glass.

During a recent field trial at LOF's float-glass facility in Ottawa, IL, the Sandia team, including technologist James Ross, using a field portable residual gas analyzer (FPRGA), identified several gas-phase species believed to be critical indicators of process condition. The FPRGA was equipped with a Micropole™ miniature mass spectrometer, which packages an array of nine quadrupoles, Faraday cup, ion optics, and ionization filaments into a structure less than 5 cm long. The figure illustrates the temporal behavior of three ion signals measured by the FPRGA as the composition of a chemical feed stream is adjusted. Having identified chemical components appropriate for process monitoring, current activities are focused upon testing advanced solid-state chemical sensors at the LOF facility.

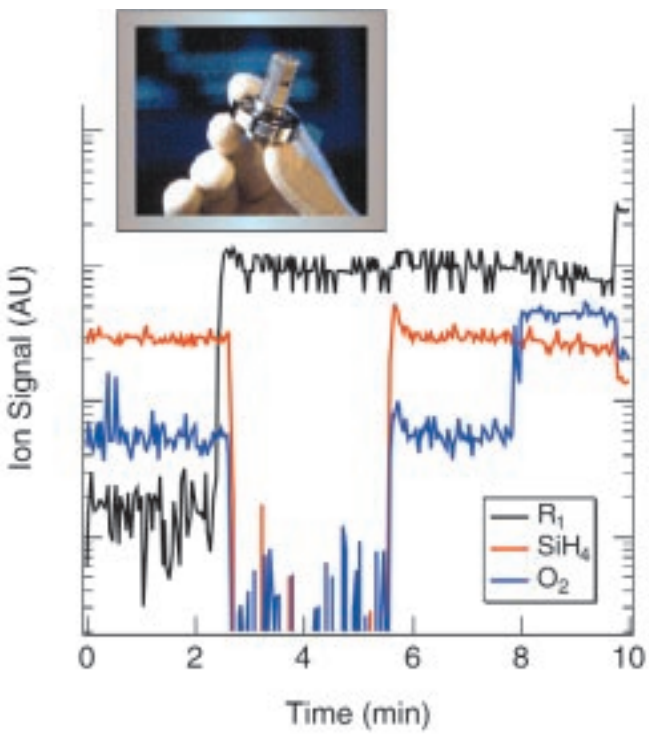

Ion signal intensity as a function of time for components of a chemical feed stream to a silica coater as the feed composition is adjusted. R_1 refers to a proprietary chemical for the process. The Micropole™ miniature mass spectrometer is pictured in the inset.

Fiber Lasers Being Developed for Chemical Sensing and Diagnostics

Spectroscopic detection of trace gases is used in a variety of applications requiring quantitative, noninvasive determination of species concentrations with high sensitivity, high specificity, and fast time response. Wide application of these diagnostic techniques outside the laboratory will require development of compact, rugged laser sources of tunable, narrow-linewidth light. Diode lasers and, optical parametric oscillators/amplifiers provide access to the infrared (IR) spectral region, and several compact, portable instruments have been developed. The lack of comparable ultraviolet (UV) sources has precluded development of similar UV-based instruments. For many species, however, UV detection schemes offer a number of advantages, including higher sensitivity and reduced susceptibility to interferences.

In collaboration with Jeff Koplow and Lew Goldberg of the Naval Research Laboratory, Dahv Kliner is developing a compact, lightweight, low-power-consumption source of tunable, narrow-linewidth UV radiation for use in a portable chemical sensor. This novel laser system exploits very recent advances in fiber amplifiers, which were originally developed for optical telecommunications. The first application of the new UV source will be in a laser-induced-fluorescence (LIF) sensor for *in situ* detection of sulfur dioxide (SO_2), a major pollutant that plays a critical role in formation of atmospheric aerosols.

In a fiber amplifier, a single-mode optical fiber is doped with a rare-earth ion that can be pumped with a laser diode to achieve a population inversion. The fiber can be used to amplify a weak seed signal or can be configured as a laser. Use of an optical fiber offers several advantages over a bulk crystal or glass host, including:

1) Both the pump and seed light are confined within the fiber, providing long interaction lengths (tens of meters) and consequently high efficiency.
2) The intrinsically high beam quality characteristic of a single-mode fiber is insensitive to thermal or mechanical perturbations and optical power level.
3) The availability of fiber-coupled components makes packaging relatively simple and low cost; the fiber pigtails can be fused, resulting in a rugged, hermetically sealed, alignment-free optical system.

Fiber amplifiers exhibit gain in the near-IR spectral region. Kliner and coworkers are attempting to extend them to the visible and UV regions. In a pilot experiment (see figure), they developed a tunable (~1040-1090 nm), single-polarization, Yb^{3+}-doped fiber amplifier pumped by a 200-mW diode laser. When seeded with low-energy pulses at 1064 nm, the amplifier produced pulses with a peak power of nearly 1 kW; these pulses were frequency quadrupled to the UV with high efficiency, producing 1.4 mW of average power. The amplifier consumed <1 W of electrical power and could be mounted on a 6" x 6" breadboard. In more recent experiments, pump powers of up to 10 W have been used, and peak powers of >10 kW have been generated.

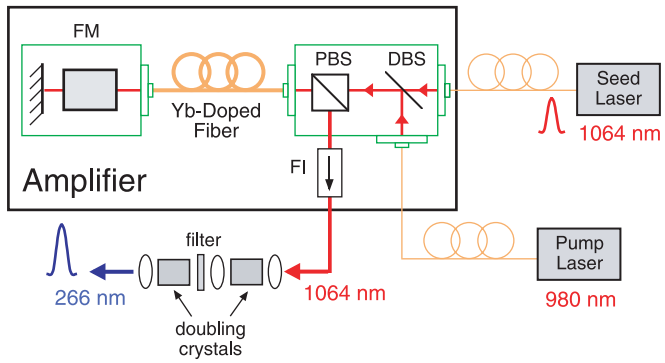

Schematic diagram of the UV laser system. DBS = dichroic beam splitter, FI = Faraday isolator, FM = Faraday mirror, PBS = polarizing beamsplitter.

Kliner and coworkers are currently developing a fiber-based source to generate tunable light at ~215 nm for LIF detection of SO_2. *In situ* measurements of SO_2 are required to address several outstanding questions concerning the role of combustion emissions on air quality, human health, and the regulation of the earth's climate. In parallel with the laser-development studies, Kliner, Roger Farrow, and Paul Schrader are performing SO_2 spectroscopic measurements in Sandia's high-resolution spectroscopy laboratory to optimize and calibrate the LIF detection scheme. This work is supported by Sandia's Laboratory Directed Research and Development program and by NASA.

Combustion Research Facility News

Sandia National Laboratories
Mail Stop 9056
P.O. Box 969
Livermore, California 94551-0969

http://www.ca.sandia.gov/CRF/

Sandia National Laboratories, a prime contractor to the U.S. Department of Energy, is operated by Sandia Corporation, a wholly owned subsidiary of the Lockheed Martin Corporation.

Sandia National Laboratories

ADDRESS CORRECTION REQUESTED

FIRST CLASS MAIL
U.S. POSTAGE
PAID
LIVERMORE, CA
94550
PERMIT NO. 234